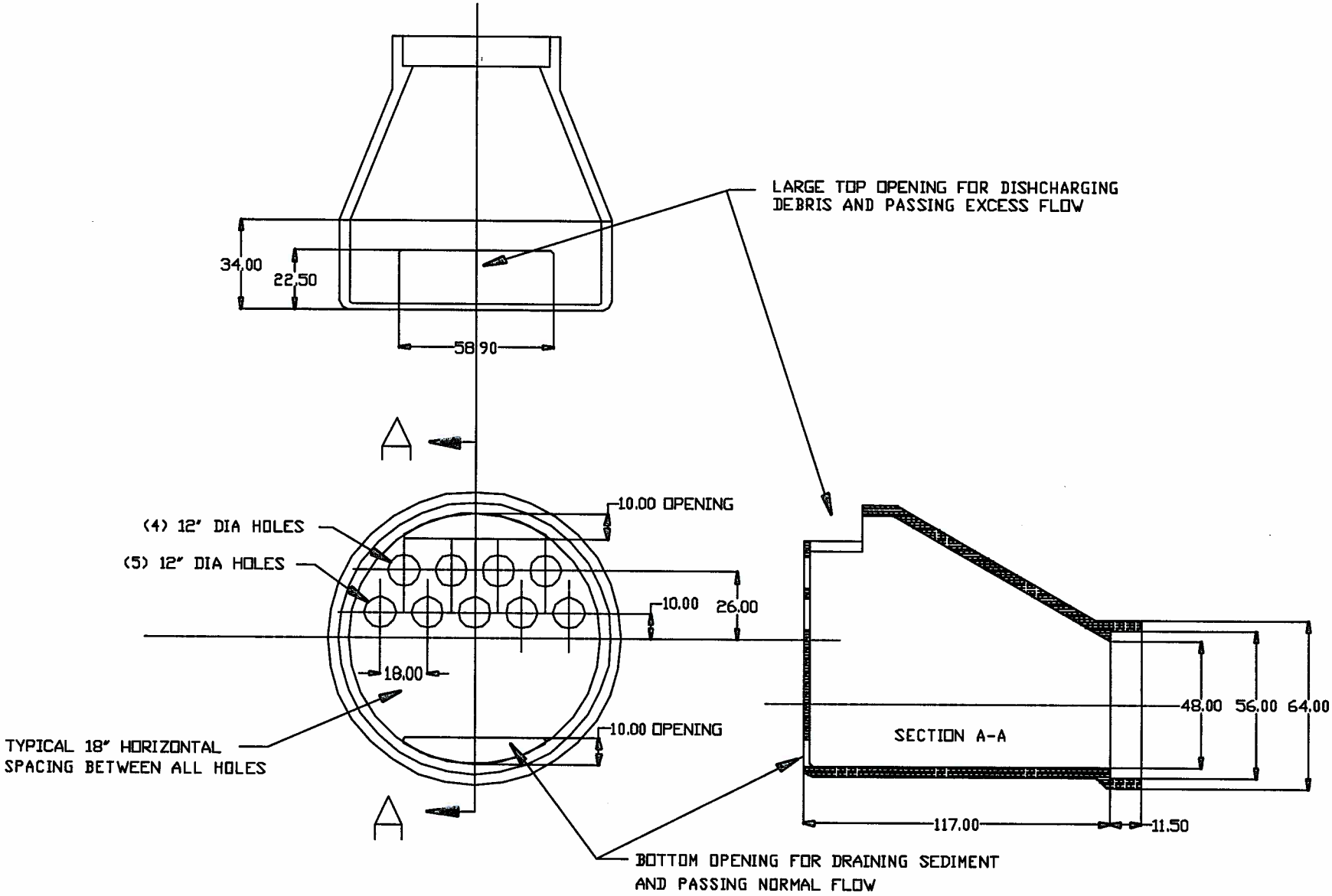

48 x 96 Inch Flat Faced Stormwater Flow Control Valve
ATA 3 August 2005